JSP42SN

GE® 30" Slide-In Electric Range with Self-Cleaning Oven

Dimensions and Installation Information

KW Rating	
240V	11.6
208V	8.7

Models are shipped with color-matched Rear Filler Strip Kit.

Optional Kits For Slide-In Electric Ranges (Available at additional cost)

Lower/Side Trim Kits Accessory Backguards

JXS56 - Lower Trim Kit JXS37 - Backguard

JXS86 - Vertical Side Trim Kit JXS77 - Body Sides

Note: To reduce possibility of scorching of the side wall adjacent to the heating elements, it is recommended a minimum of 6" spacing from adjacent side walls be allowed for possible extended, high-heat, no-bad operation of heating elements.

Receptacle Location: For all 30" Slide-In Ranges locally approved flexible service cord or conduit must be used because terminals are not accessible after range installation. See shaded area in drawing for location of electrical outlet box. Recommended outlet locations allow range to be installed directly against rear wall.

Note: Cabinets installed adjacent to slide-in ranges must have an adhesion spec of at least 194°.

Installation Information: Before installing, consult installation instructions packed with product for current dimensional data.

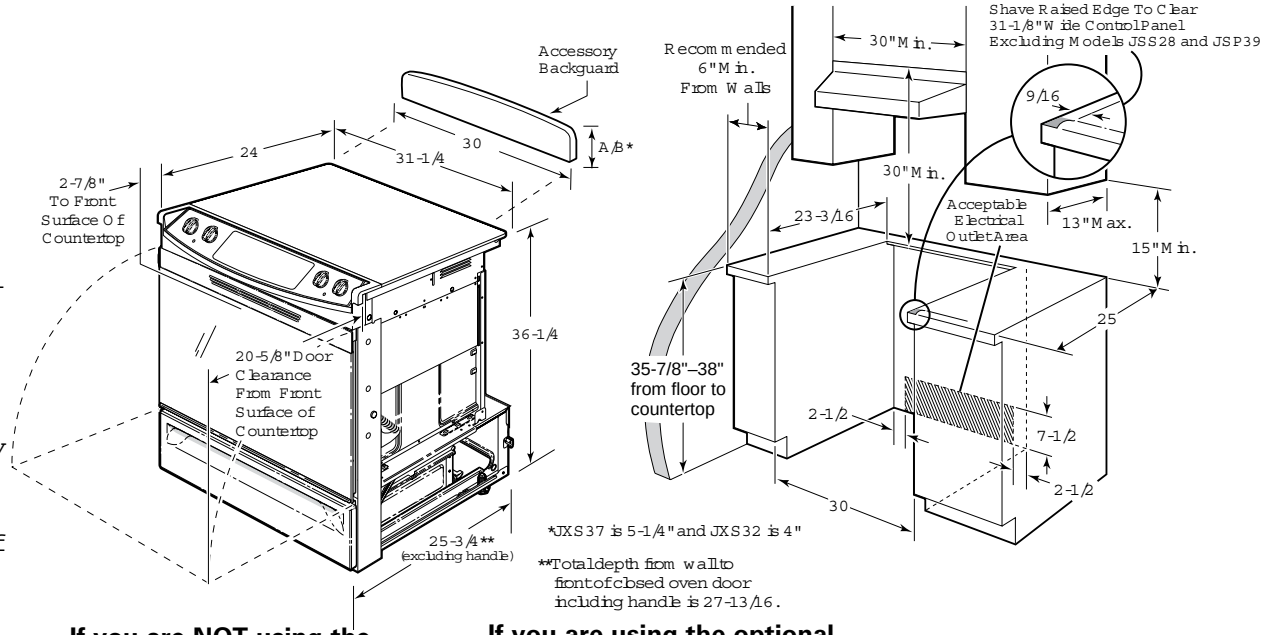

If you are NOT using the optional Filler or Backguard:

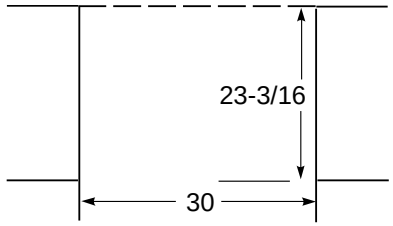

If you are using the optional Filler or Backguard:

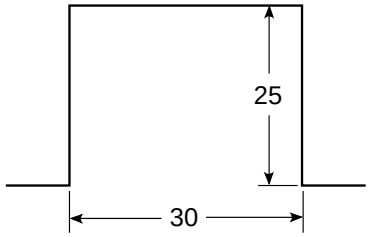

For answers to your Monogram®, GE Profile™ or GE® appliance questions, visit our website at ge.com or call GE Answer Center® service, 800.626.2000.

Dimension and installation information are shown in inches.

All GE ranges are equipped with an Anti-Tip device. The installation of this device is an important, required step in the installation of the range.

Listed by Underwriters Laboratories

imagination at work

Specification Created 7/08

320646